STV160NF03L

N-CHANNEL 30V - 0.0019Ω - 160A PowerSO-10
STripFET™ POWER MOSFET

TYPE	V_{DSS}	$R_{DS(on)}$	I_D
STV160NF03L	30 V	< 0.0028 Ω	160 A

- TYPICAL R_{DS}(on) = 0.0019 Ω
- LOW THRESHOLD DRIVE
- ULTRA LOW ON-RESISTANCE
- ULTRA FAST SWITCHING
- 100% AVALANCHE TESTED
- VERY LOW GATE CHARGE
- LOW PROFILE, VERY LOW PARASITIC INDUCTANCE PowerSO-10 PACKAGE

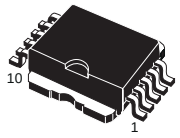

PowerSO-10

INTERNAL SCHEMATIC DIAGRAM

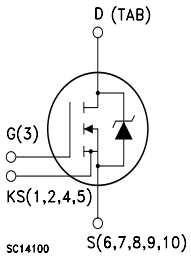

CONNECTION DIAGRAM (TOP VIEW)

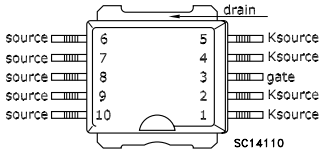

DESCRIPTION

The **STV160NF03L** represents the second generation of Application Specific STMicroelectronics well established STripFET™ process based on a very unique strip layout design. The resulting MOSFET shows unrivalled high packing density with ultra low on-resistance and superior switching charactestics. Process simplification also translates into improved manufacturing reproducibility. This device is particularly suitable for high current, low voltage switching application where efficiency is crucial

APPLICATIONS

- BUCK CONVERTERS IN HIGH PERFORMANCE TELECOM AND VRMs DC-DC CONVERTERS

ABSOLUTE MAXIMUM RATINGS

Symbol	Parameter	Value	Unit
V_{DS}	Drain-source Voltage (V_{GS} = 0)	30	V
V_{DGR}	Drain-gate Voltage (R_{GS} = 20 kΩ)	30	V
V_{GS}	Gate- source Voltage	± 15	V
I_D(**)	Drain Current (continuos) at T_C = 25°C	160	A
I_D	Drain Current (continuos) at T_C = 100°C	113	A
I_{DM} (●)	Drain Current (pulsed)	640	A
P_{TOT}	Total Dissipation at T_C = 25°C	210	W
	Derating Factor	1.4	W/°C
E_{AS} (1)	Single Pulse Avalanche Energy	1	J
T_{stg}	Storage Temperature	–65 to 175	°C
T_j	Max. Operating Junction Temperature	175	°C

(●) Pulse width limited by safe operating area

(1) Starting T_j=25°C , I_D = 80A, V_{DD} = 20V

(**)Limited only maximum junction temperature allowed by PowerSO-10

THERMAL DATA

Rthj-case	Thermal Resistance Junction-case Max	0.71	°C/W
Rthj-amb	Thermal Resistance Junction-ambient Max	50	°C/W
T_l	Maximum Lead Temperature For Soldering Purpose	300	°C

ELECTRICAL CHARACTERISTICS (TCASE = 25 °C UNLESS OTHERWISE SPECIFIED)

OFF

Symbol	Parameter	Test Conditions	Min.	Typ.	Max.	Unit
$V_{(BR)DSS}$	Drain-source Breakdown Voltage	I_D = 250 µA, V_{GS} = 0	30			V
I_{DSS}	Zero Gate Voltage Drain Current (V_{GS} = 0)	V_{DS} = Max Rating V_{DS} = Max Rating, T_C = 125 °C			1 10	µA µA
I_{GSS}	Gate-body Leakage Current (V_{DS} = 0)	V_{GS} = ± 15 V			±100	nA

ON (1)

Symbol	Parameter	Test Conditions	Min.	Typ.	Max.	Unit
$V_{GS(th)}$	Gate Threshold Voltage	V_{DS} = V_{GS}, I_D = 250µA	1			V
$R_{DS(on)}$	Static Drain-source On Resistance	V_{GS} = 10 V, I_D = 80 A V_{GS} = 10 V, I_D = 45 A V_{GS} = 8 V, I_D = 80 A V_{GS} = 5 V, I_D = 40 A V_{GS} = 10 V, I_D=80 A;T_j = 175 °C V_{GS} = 8 V, I_D=80 A; T_j = 175 °C V_{GS} = 5 V, I_D=40 A; T_j = 175 °C		1.9 1.86 2 4	2.8 2.8 3.8 6.7 6.4 7.8 12.8	mΩ mΩ mΩ mΩ mΩ mΩ mΩ
$I_{D(on)}$	On State Drain Current	V_{DS} > $I_{D(on)}$ x $R_{DS(on)max}$, V_{GS} = 10V	160			A

DYNAMIC

Symbol	Parameter	Test Conditions	Min.	Typ.	Max.	Unit
g_{fs} (1)	Forward Transconductance	V_{DS} > $I_{D(on)}$ x $R_{DS(on)max}$, I_D = 80 A		210		S
R_g	Gate resistance	V_{DS} = 0 V, f = 1 MHz, V_{GS} = 0		0.5		Ω
C_{iss} C_{oss} C_{rss}	Input Capacitance Output Capacitance Reverse Transfer Capacitance	V_{DS} = 25 V, f = 1 MHz, V_{GS} = 0		4700 1580 240		pF pF pF
C_{iss} C_{oss} C_{rss}	Input Capacitance Output Capacitance Reverse Transfer Capacitance	V_{DS} = 0 V, f = 1 MHz, V_{GS} = 0		6500 9500 4000		pF pF pF
L_S	Internal Source Inductance	From the Lead End (6mm from Package Body) to the Die Center		4		nH
L_D	Internal Drain Inductance		Not Available on Surface Mounting Package			

ELECTRICAL CHARACTERISTICS (CONTINUED)

SWITCHING ON

Symbol	Parameter	Test Conditions	Min.	Typ.	Max.	Unit
$t_{d(on)}$	Turn-on Delay Time	V_{DD} = 15 V, I_D = 80 A R_G = 4.7Ω V_{GS} = 10V (see test circuit, Figure 3)		30		ns
t_r	Rise Time			380		ns
Q_g	Total Gate Charge	V_{DD} = 24 V, I_D = 160 A, V_{GS} = 10 V		103	140	nC
Q_{gs}	Gate-Source Charge			21		nC
Q_{gd}	Gate-Drain Charge			38		nC

SWITCHING OFF

Symbol	Parameter	Test Conditions	Min.	Typ.	Max.	Unit
$t_{d(off)}$ t_f	Turn-off-Delay Time Fall Time	V_{DD} = 15 V, I_D = 80 A, R_G = 4.7Ω, V_{GS} = 10 V (see test circuit, Figure 5)		80 170		ns ns
$t_{d(off)}$ $t_{r(Voff)}$ t_f t_c	Turn-off Delay Time Off-voltage Rise Time Fall Time Cross-over Time	Vclamp = 24 V, I_D = 40 A R_G = 4.7Ω, V_{GS} = 10V		75 25 90 125		ns ns ns ns

SOURCE DRAIN DIODE

Symbol	Parameter	Test Conditions	Min.	Typ.	Max.	Unit
I_{SD}	Source-drain Current				160	A
I_{SDM} (1)	Source-drain Current (pulsed)				640	A
V_{SD} (2)	Forward On Voltage	I_{SD} = 160 A, V_{GS} = 0			1.5	V
t_{rr}	Reverse Recovery Time	I_{SD} = 80 A, di/dt = 100A/µs, V_{DD} = 15V, T_j = 25°C (see test circuit, Figure 5)		80		ns
Q_{rr}	Reverse Recovery Charge			180		nC
I_{RRM}	Reverse Recovery Current			4.5		A

Note: 1. Pulsed: Pulse duration = 300 µs, duty cycle 1.5 %.
2. Pulse width limited by safe operating area.

Safe Operating Area

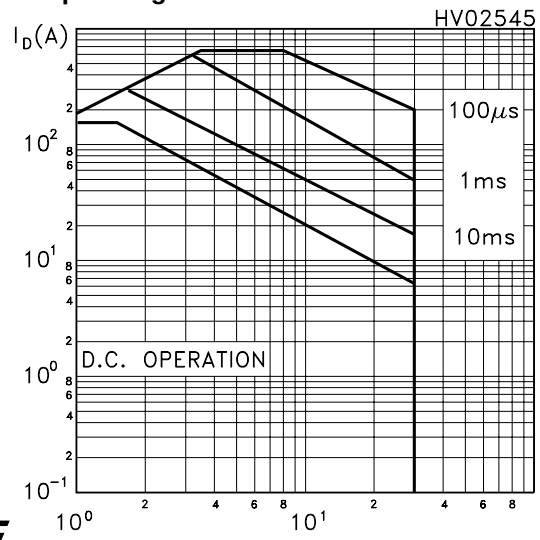

Thermal Impedance

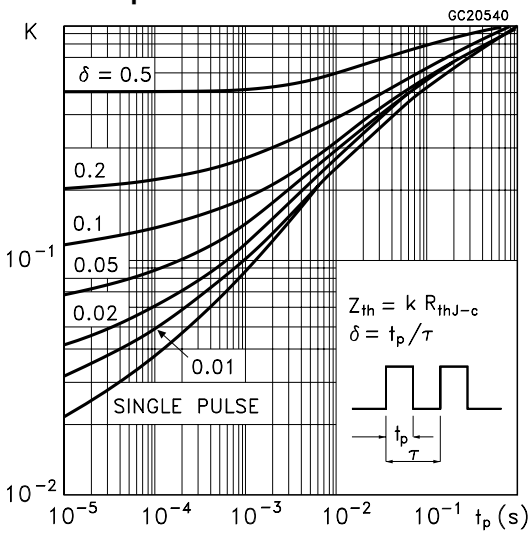

Output Characteristics

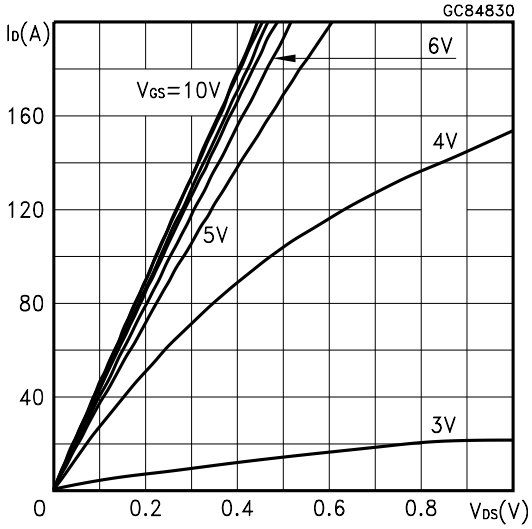

Tranfer Characteristics

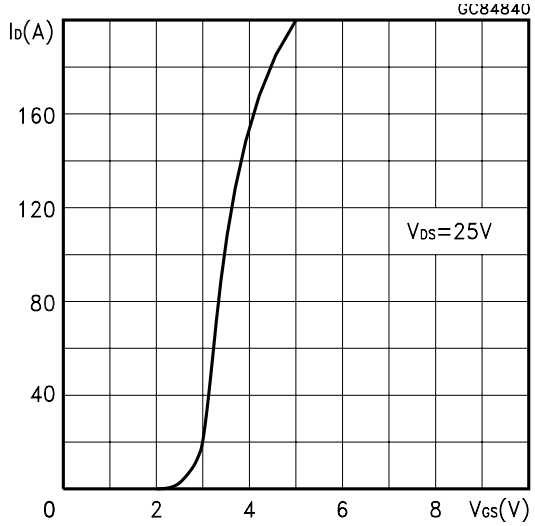

Tranconductance

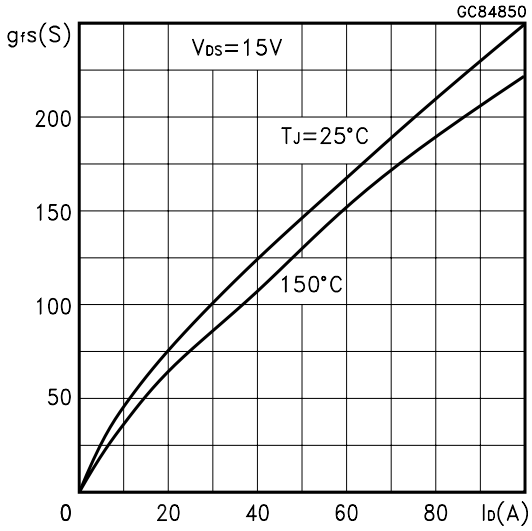

Static Drain-Source On Resistance

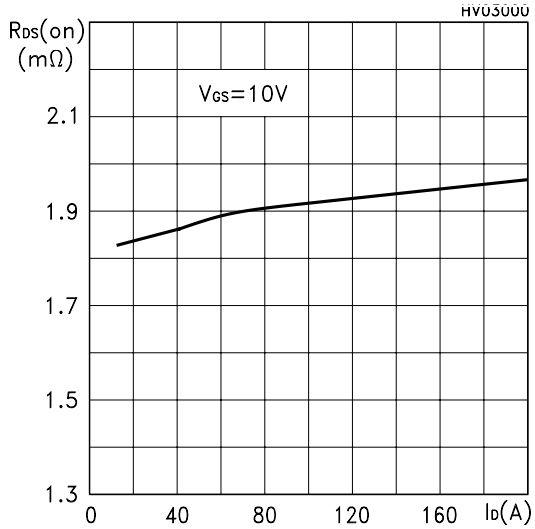

Gate Charge vs Gate-source Voltage

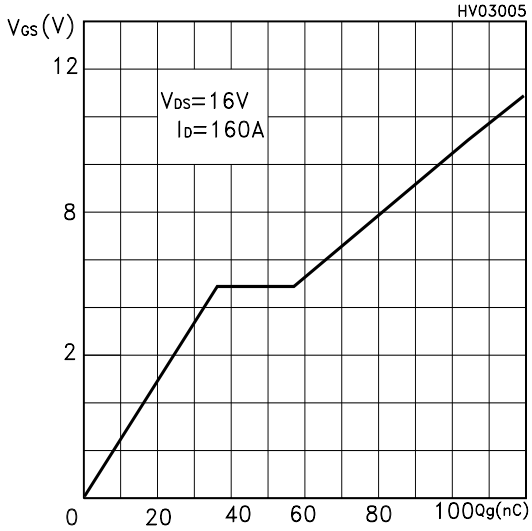

Capacitance Variations

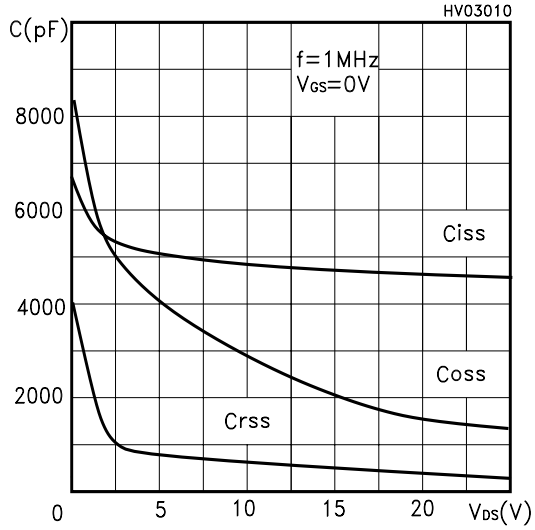

Normalized Gate Thereshold Voltage vs Temp.

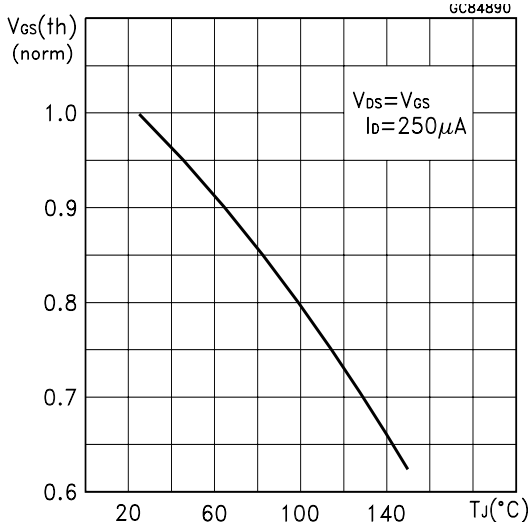

Normalized On Resistance vs Temperature

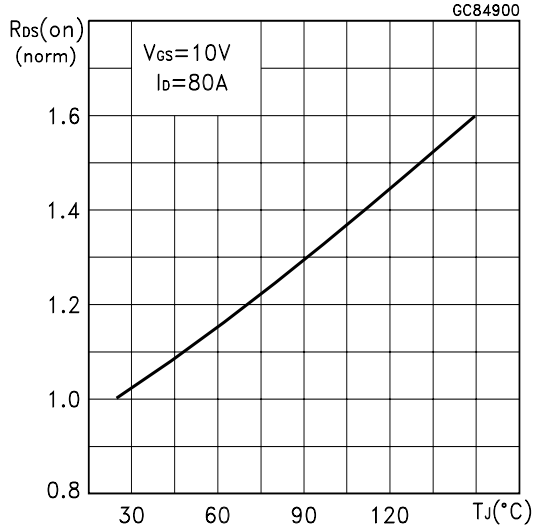

Source-drain Diode Forward Characteristics

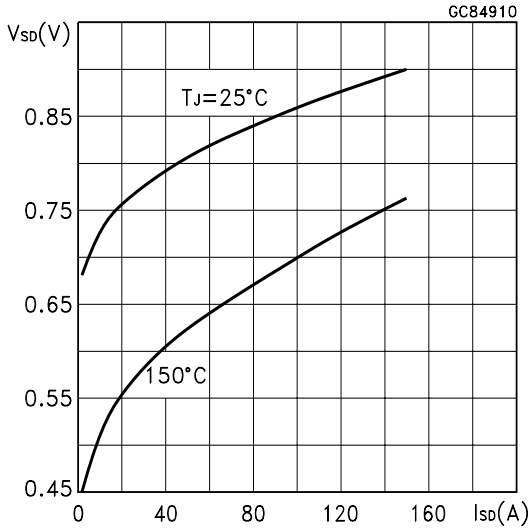

Basic Schematic For Motherboard VRM Whith Synchronous Rectification

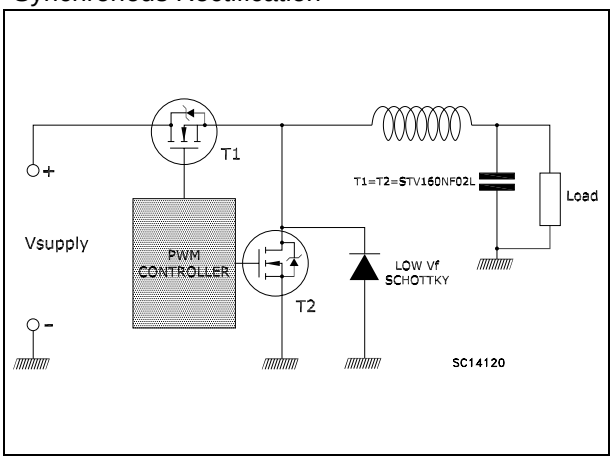

Basic Schematic Mosfets Switch Used In Secondary Side Of a Froward Convert

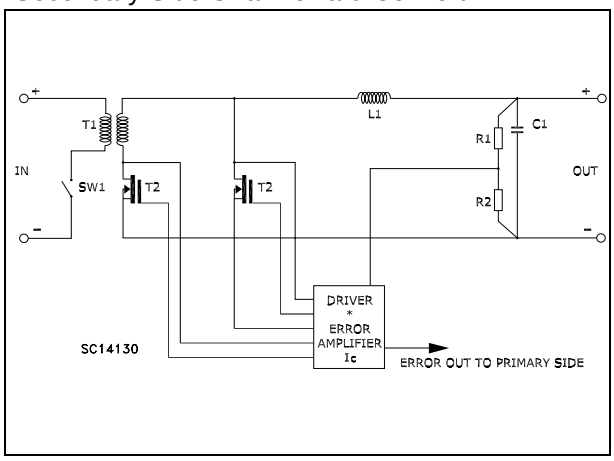

Fig. 1: Unclamped Inductive Load Test Circuit

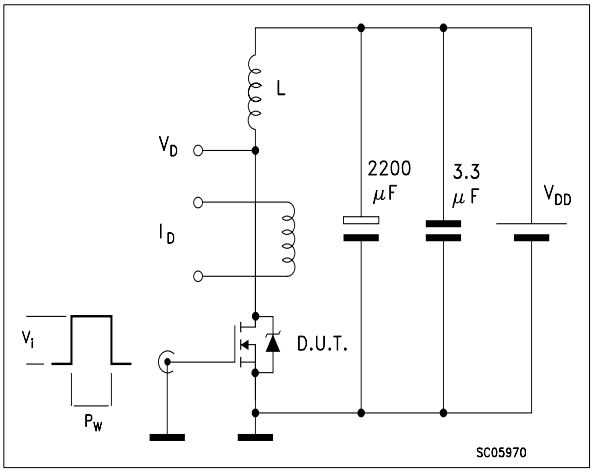

Fig. 2: Unclamped Inductive Waveform

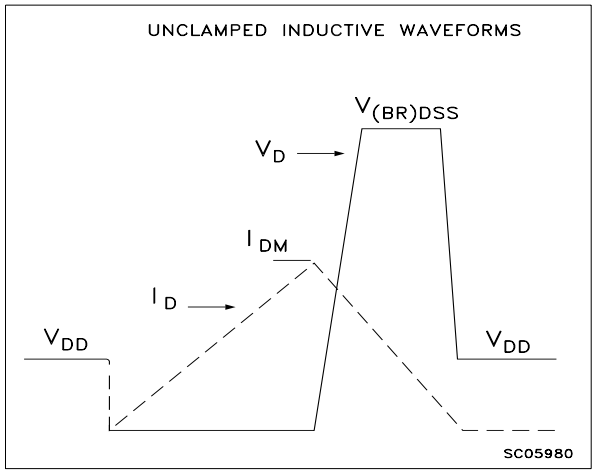

Fig. 3: Switching Times Test Circuit For Resistive Load

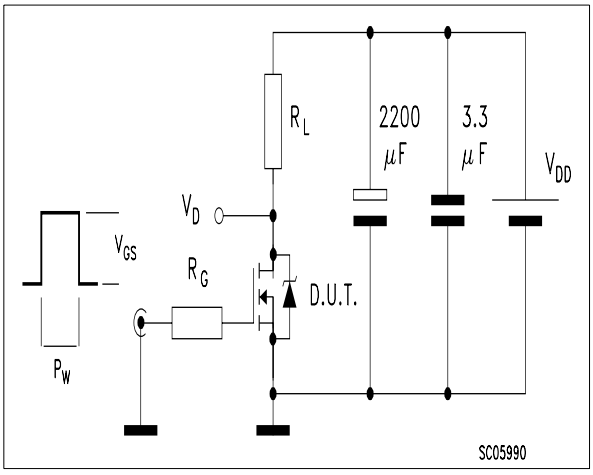

Fig. 4: Gate Charge test Circuit

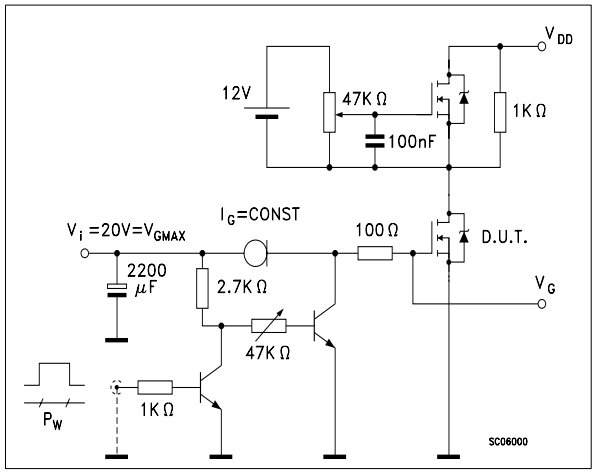

Fig. 5: Test Circuit For Inductive Load Switching And Diode Recovery Times

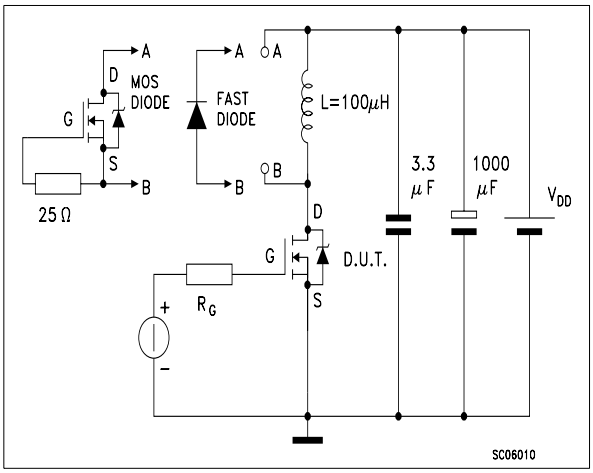

PowerSO-10 MECHANICAL DATA

DIM.	mm			inch		
	MIN.	TYP.	MAX.	MIN.	TYP.	MAX.
A	3.35		3.65	0.132		0.144
A1	0.00		0.10	0.000		0.004
B	0.40		0.60	0.016		0.024
C	0.35		0.55	0.013		0.022
D	9.40		9.60	0.370		0.378
D1	7.40		7.60	0.291		0.300
e		1.27			0.050	
E	9.30		9.50	0.366		0.374
E1	7.20		7.40	0.283		0.291
E2	7.20		7.60	0.283		0.300
E3	6.10		6.35	0.240		0.250
E4	5.90		6.10	0.232		0.240
F	1.25		1.35	0.049		0.053
h		0.50			0.002	
H	13.80		14.40	0.543		0.567
L	1.20		1.80	0.047		0.071
q		1.70			0.067	
α	0°		8°			

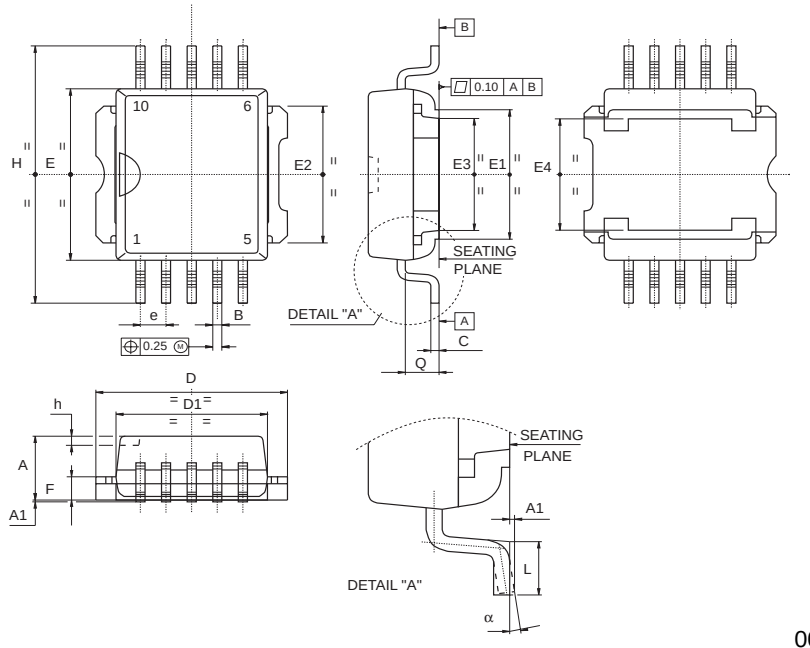

0068039-C

Information furnished is believed to be accurate and reliable. However, STMicroelectronics assumes no responsibility for the consequences of use of such information nor for any infringement of patents or other rights of third parties which may result from its use. No license is granted by implication or otherwise under any patent or patent rights of STMicroelectronics. Specifications mentioned in this publication are subject to change without notice. This publication supersedes and replaces all information previously supplied. STMicroelectronics products are not authorized for use as critical components in life support devices or systems without express written approval of STMicroelectronics.

© The ST logo is a registered trademark of STMicroelectronics

© 2002 STMicroelectronics - Printed in Italy - All Rights Reserved
STMicroelectronics GROUP OF COMPANIES
Australia - Brazil - Canada - China - Finland - France - Germany - Hong Kong - India - Israel - Italy - Japan - Malaysia - Malta - Morocco
Singapore - Spain - Sweden - Switzerland - United Kingdom - United States.
© http://www.st.com